LIQUIFLO EQUIPMENT CO. GARWOOD, N.J. 07027	MODEL: ROTOGEAR MAG-DRIVE, 312F/312R & H12F/H12R, BASE ASSEMBLED, FLANGED PORTS DWG. NO. 20187 REV. B	SERIES 3 & H

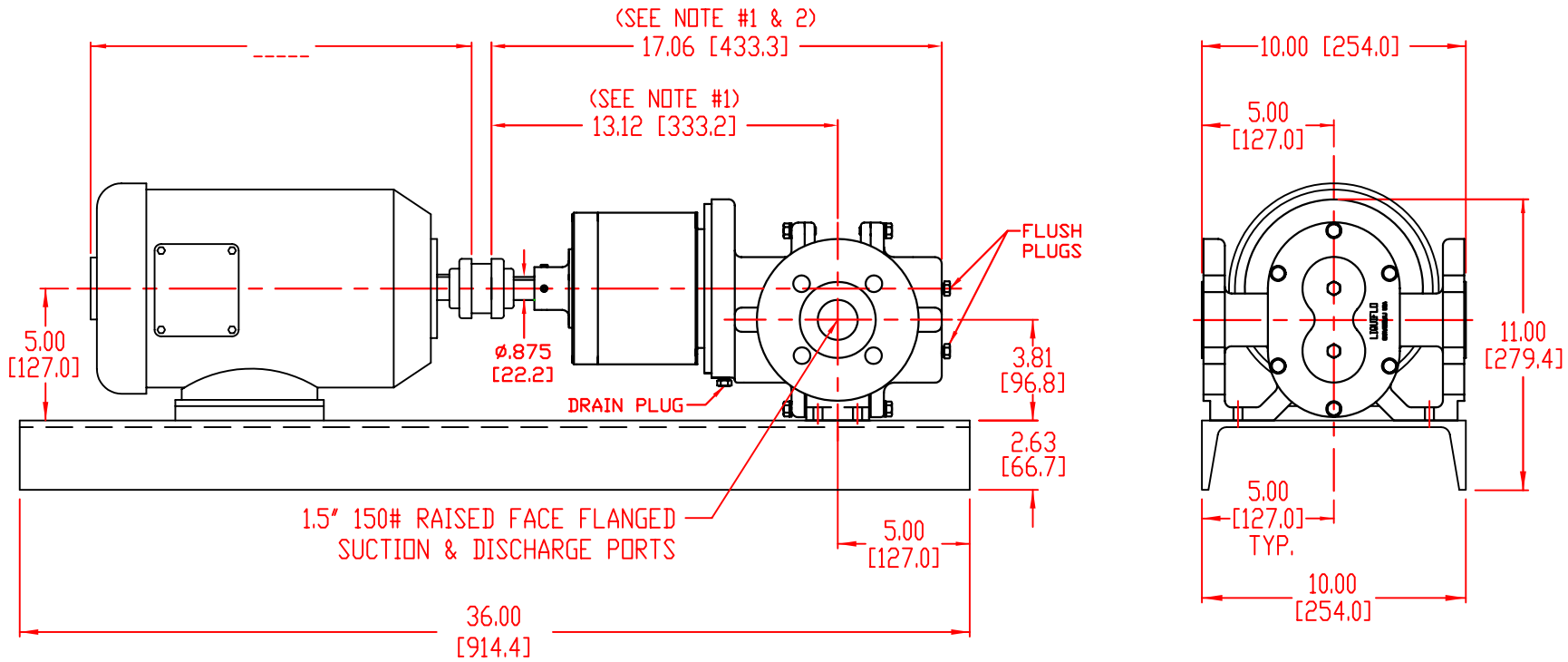

NOTES:

1) DIMENSION BASED ON MCJ/MCK MAGNETIC COUPLING.
2) ADD .31 [7.9] FOR BEARING FLUSH PLUGS.

INCH [MM]