| LIQUIFLO EQUIPMENT CO.<br>GARWOOD, N.J. 07027 | MODEL: ROTOGEAR MAG-DRIVE, 312F/312R & H12F/H12R, BARE PUMP, THREADED PORTS<br>DWG. NO. 20152 REV. --- | SERIES<br>3 & H |
|---|---|---|

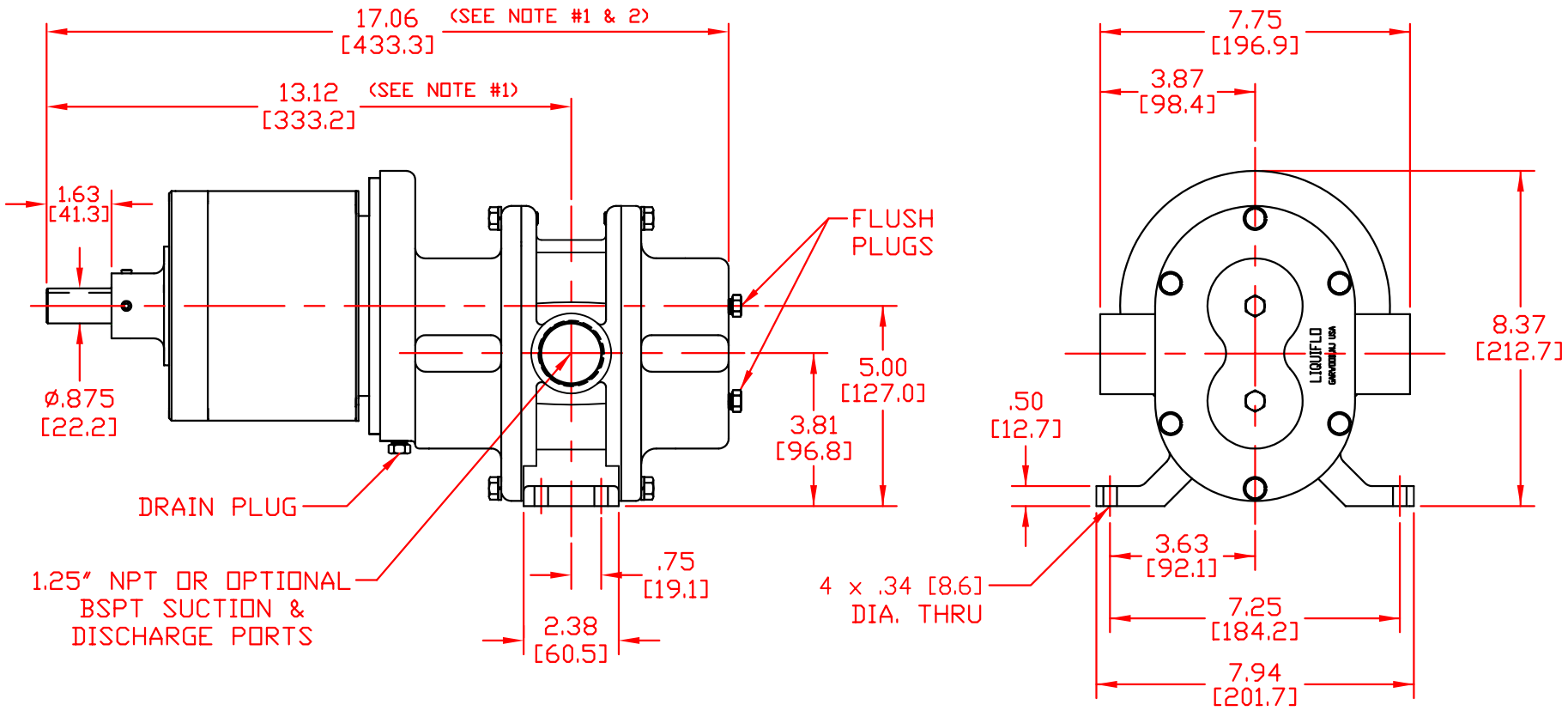


NOTES:

1) DIMENSION BASED ON MCJ/MCK MAGNETIC COUPLING.
2) ADD .31 [7.9] FOR BEARING FLUSH PLUGS.

INCH [MM]