LIQUIFLO EQUIPMENT CO. GARWOOD, N.J. 07027	MODEL: ROTOGEAR MAG-DRIVE, 37F/37R & H7F/H7R/H7N, WITH S-ADAPTER, BASE ASSEMBLED DWG. NO. 20378 REV. C	SERIES 3 & H

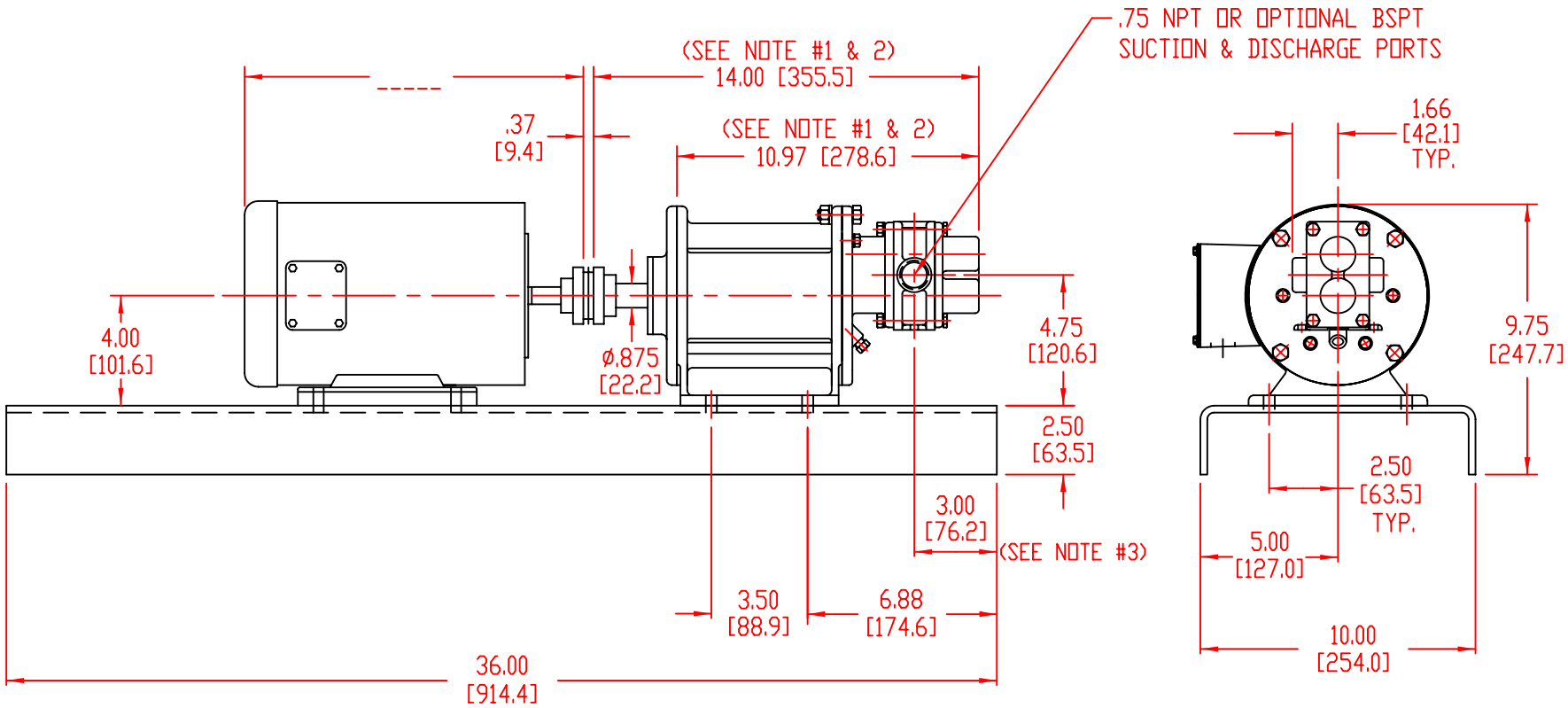

NOTES:

1) ADD .31 [7.9] FOR BEARING FLUSH PLUGS.
2) FOR 37R & H7R/H7N PUMPS, SUBTRACT .25 [6.4].
3) FOR 37R & H7R/H7N PUMPS, ADD .13 [3.3].

INCH
[MM]