LIQUIFLO EQUIPMENT CO. GARWOOD, N.J. 07027	MODEL: H12F/H12R MAG-DRIVE GEAR PUMP, CLOSE-COUPLED, BASE ASSEMBLED, FLANGED PORTS DWG. NO. 20166 REV. ---	SERIES H

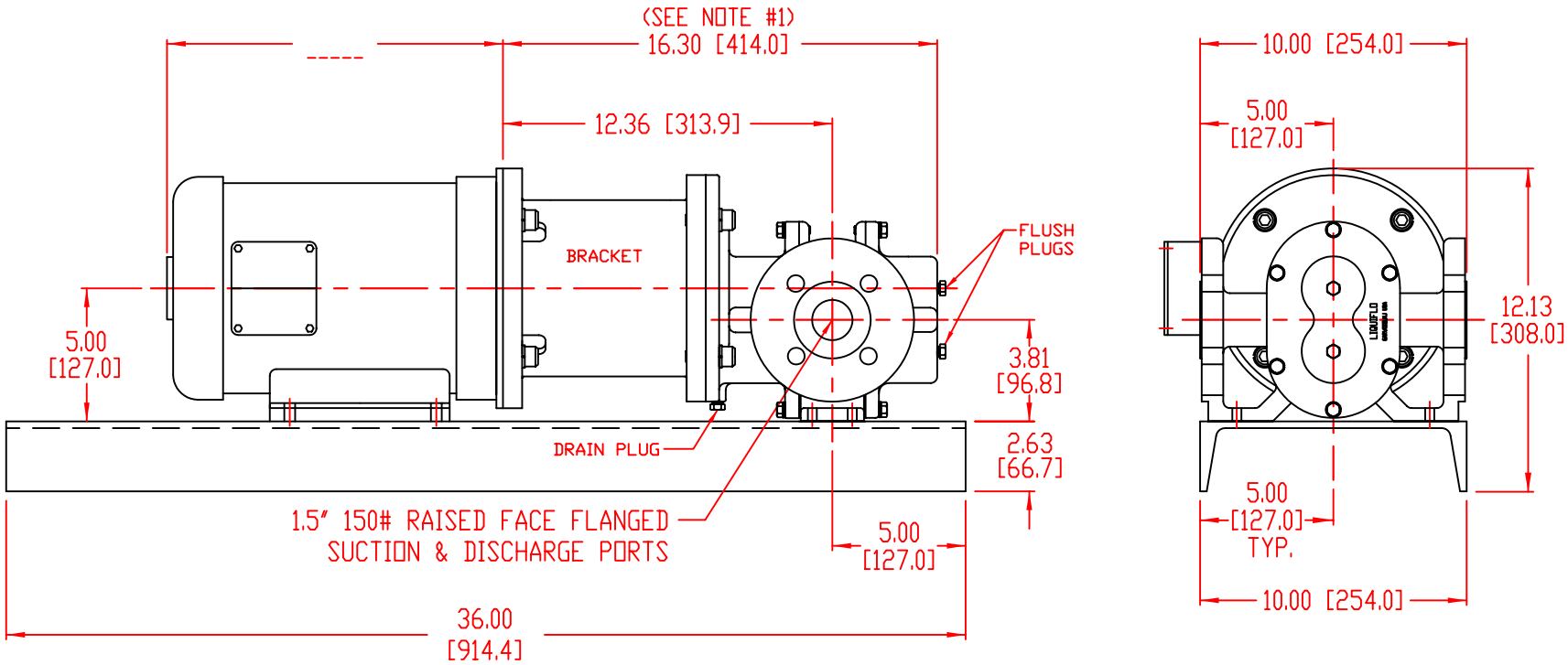

INCH [MM]

NOTES:
1) ADD .31 [7.9] FOR BEARING FLUSH PLUGS.