| LIQUIFLO EQUIPMENT CO.<br>GARWOOD, N.J. 07027 | MODEL: H12F & H12R MAG-DRIVE GEAR PUMP, CLOSE-COUPLED, THREADED PORTS<br>DWG. NO. 20164 REV. --- | SERIES<br>H |
|---|---|---|

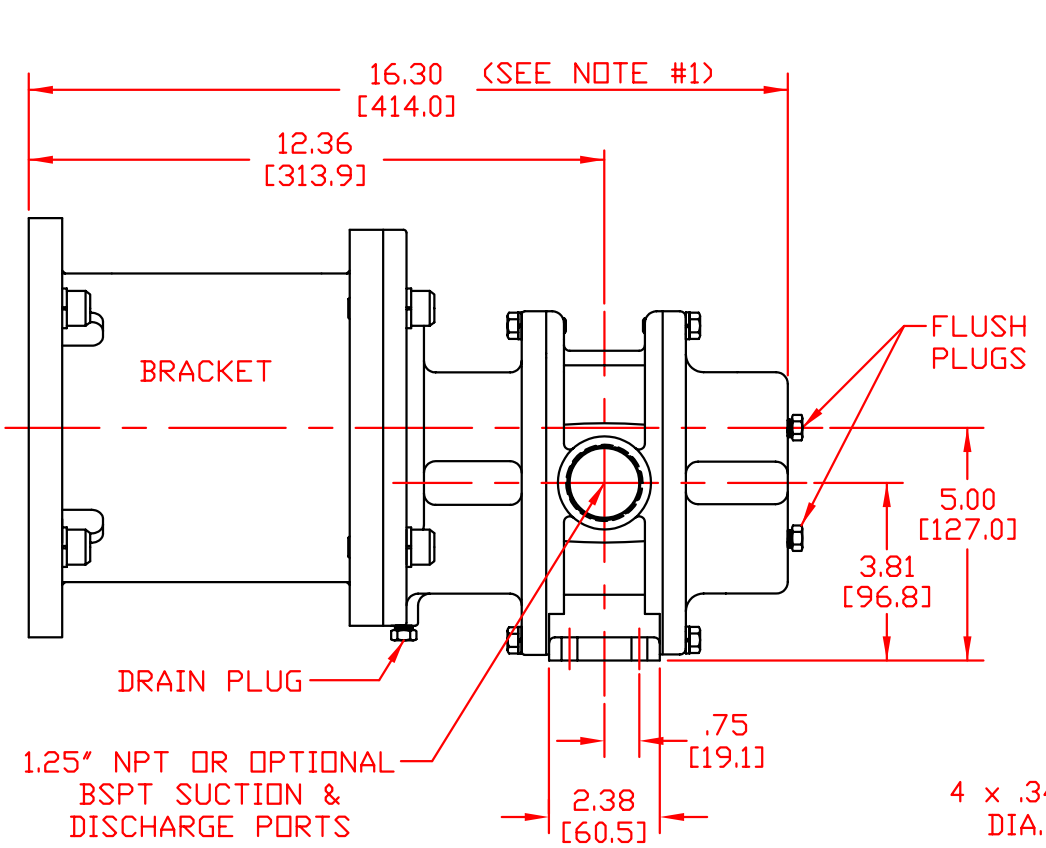


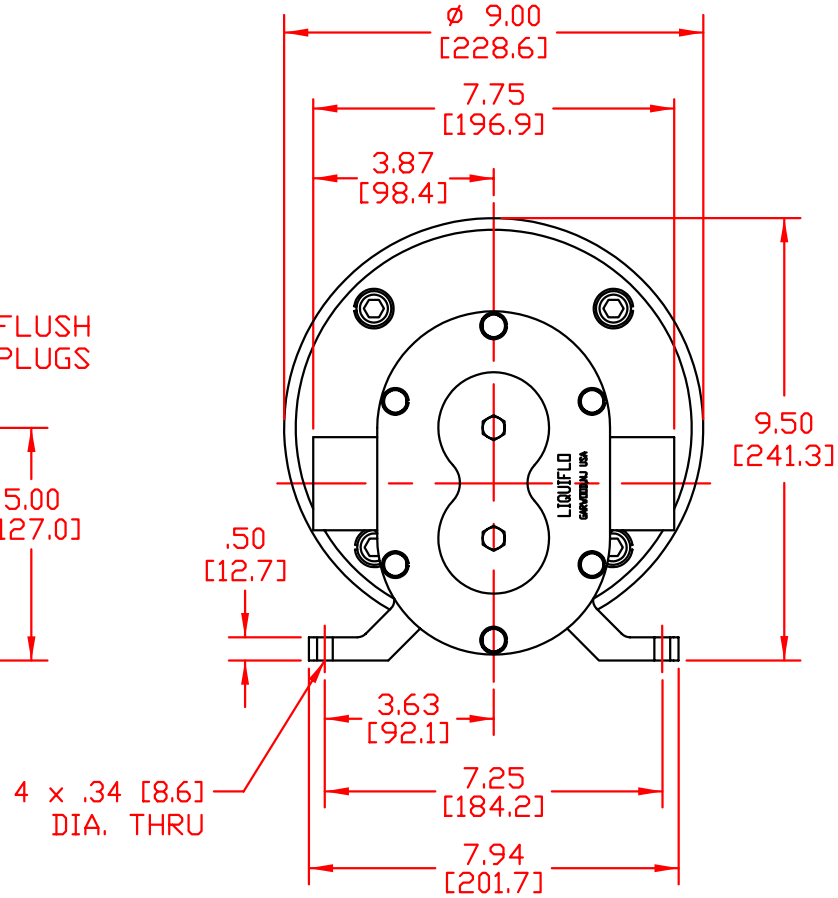


INCH [MM]

NOTES:

1) ADD .31 [7.9] FOR BEARING FLUSH PLUGS.