LIQUIFLO EQUIPMENT CO.
GARWOOD, N.J. 07027

MODEL: 621 MAG-DRIVE CENTRIFUGAL PUMP, WITH S-ADAPTER, FLANGED PORTS

DWG. NO. 20715 REV. ---
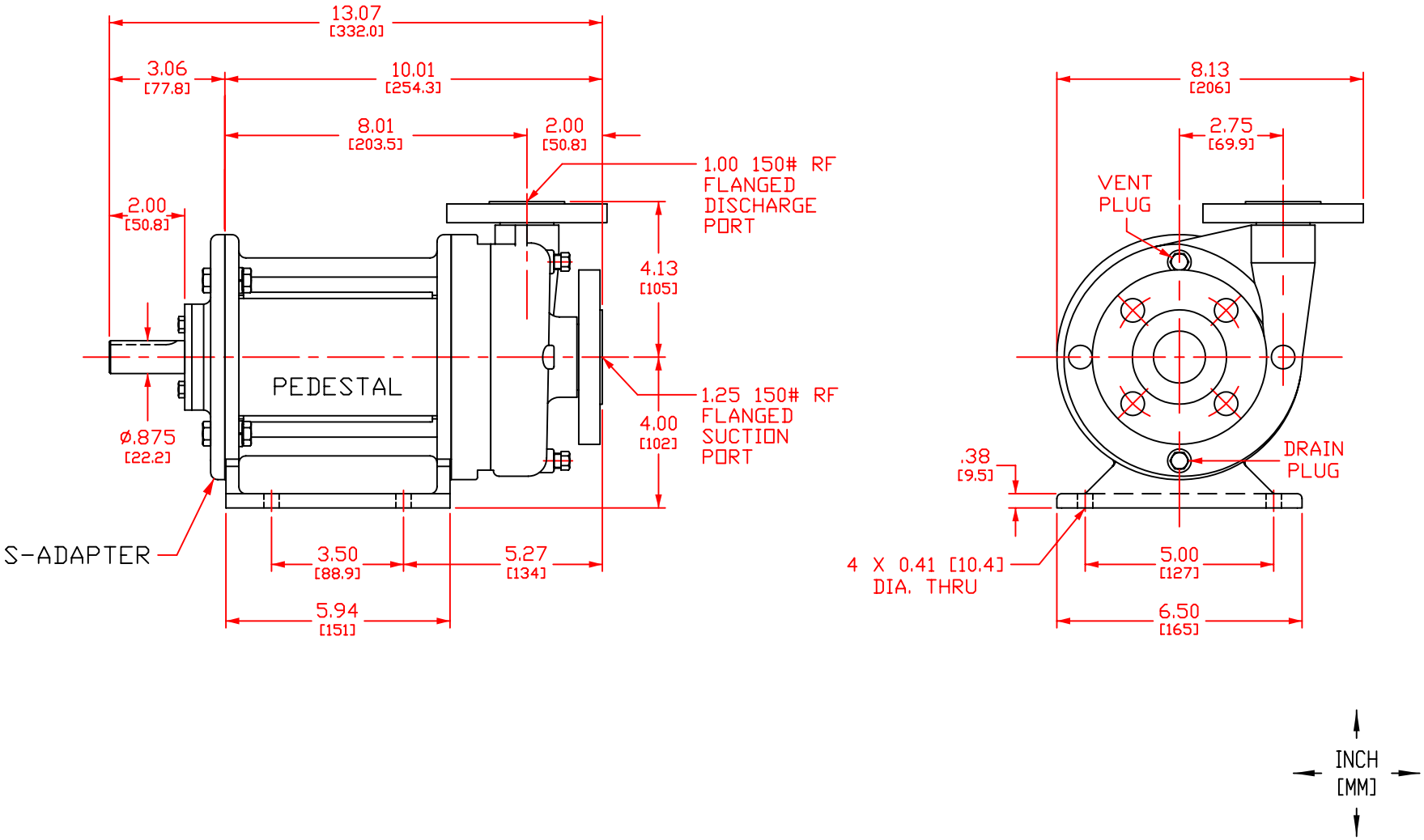
SERIES CENTRY