LIQUIFLO EQUIPMENT CO. GARWOOD, N.J. 07027	MODEL: 622 MAG-DRIVE CENTRIFUGAL PUMP, WITH POWER FRAME, NPT PORTS DWG. NO. 20732 REV. ---	SERIES CENTRY

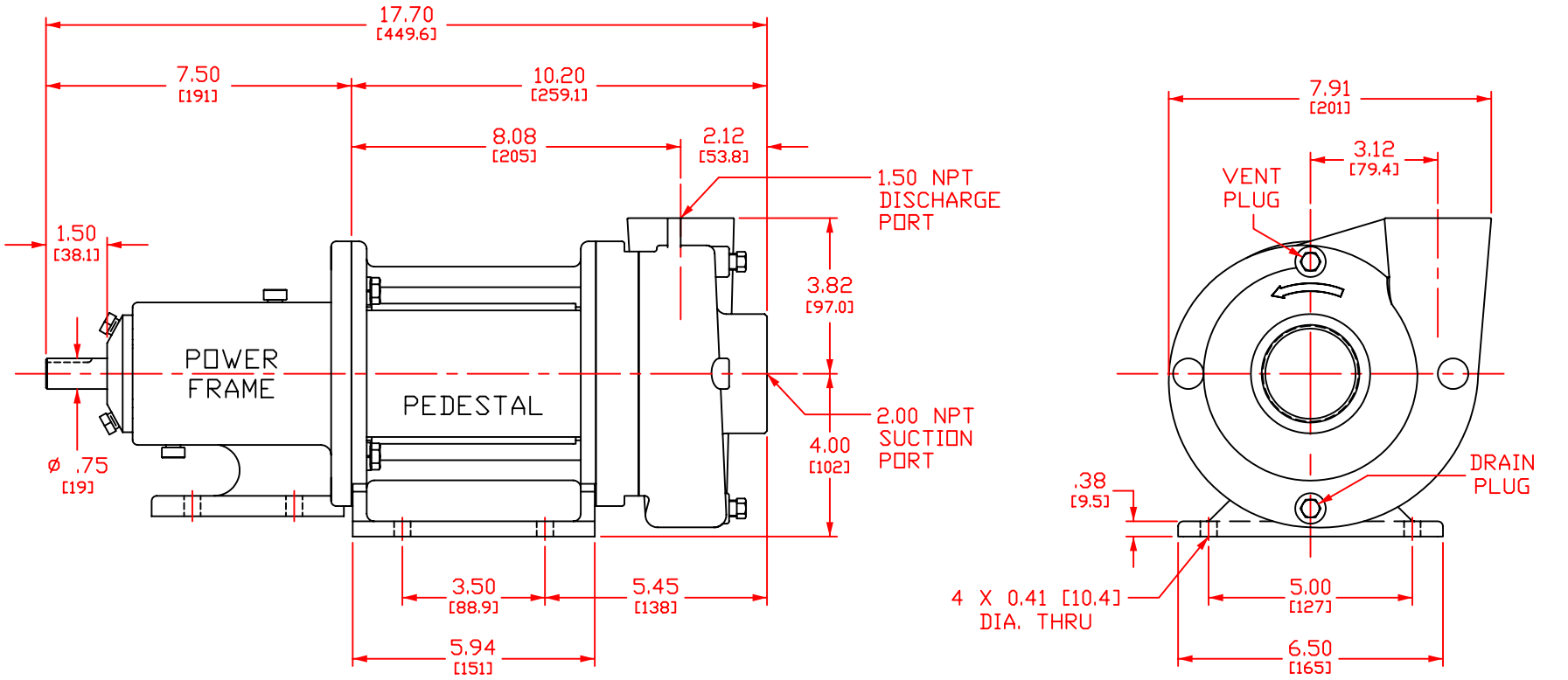

INCH
[MM]