PUMP MODEL CODING
4-Series Gear Pumps

Example:

43S6PEEN200, designates a Model 43 Mag-Drive Pump.

43	S	6	P	E	E	N	2	0	0
1	2	3	4	5	6	7	8	9	10

Pos.	Description	Selection	
1	Pump Model	43	**43 Pump**
2	Basic Mat'l/Ports	S	**316 SS NPT**
3	Drive Gear Mat'l	6	**316 SS**
4	Idler Gear Mat'l	P	**PEEK**
5	Wear Plate Mat'l	E	**Carbon 60**
6	Bearing Mat'l	E	**Carbon 60**
7	Magnetic Coupling	N	**MCN**
8	Outer Magnet Bore	2	**.625" (56C motor)**
9	Shafts	0	**316 SS (uncoated)**
10	Motor	0	**None**

Liquiflo's Model Code describes both the pump's size and materials selected. This model code is required for the future identification of your pump when reordering either a pump or replacement parts. Model code is permanently stamped into pump housing.

■ **Available**
⊗ **Not Available**
CF Contact Factory

Liquiflo 4-Series Gear Pumps
Selection & Availability

Liquiflo
4-SERIES EXTERNAL GEAR PUMP

Sample Model No.	43	S	6	P	E	E	N	2	0	0
Position No.	1	2	3	4	5	6	7	8	9	10

Position			41	43	44	45
Position Model	**1**	**Pump Model**				
Position Basic Material & Port Type	**2**	**S** = 316 SS NPT	■	■	■	■
		X = 316 SS BSPT	■	■	■	■
		H = Alloy-C NPT	■	■	■	■
		Y = Alloy-C BSPT	■	■	■	■
		T = Titanium NPT	■	■	■	■
		Z = Titanium BSPT	■	■	■	■
Position Drive Gear	**3**	**1** = Alloy-C	■	■	■	■
		3 = Teflon	CF	■	■	■
		4 = Titanium	■	■	■	■
		6 = 316 SS	■	■	■	■
		P = PEEK	■	■	■	■
Position Idler Gear	**4**	**1** = Alloy-C	■	■	■	■
		3 = Teflon	CF	■	■	■
		4 = Titanium	■	■	■	■
		6 = 316 SS	■	■	■	■
		8 = Ryton	■	■	■	■
		P = PEEK	■	■	■	■
Position Wear Plates	**5**	**3** = Teflon	■	■	■	■
		4 = Silicon Carbide	■	■	■	■
		E = Carbon 60	■	■	■	■
		P = PEEK	■	■	■	■
Position Bearings	**6**	**3** = Teflon	■	■	■	■
		B = Silicon Carbide	■	■	■	■
		E = Carbon 60	■	■	■	■
		P = PEEK	■	■	■	■
Position Magnetic Coupling	**7**	**N** = 20 in-lbs	■	■	■	■
		R = 30 in-lbs	■	■	■	■
Position Outer Magnet Bore (Motor Frame)	**8**	**0** = .500" (NEMA 48C)	■	■	■	■
		1 = 14 mm (IEC 71 - B14 Face)	■	■	■	■
		2 = .625" (NEMA 56C)	■	■	■	■
Position Shafts	**9**	**0** = Material Same as Housing (uncoated)*	■	■	■	■
		1 = Chrome Oxide Coated	■	■	■	■
		2 = Tungsten Carbide Coated	■	■	■	■
Position Motor	**10**	**0** = No Motor	■	■	■	■
		A = 0.25 Hp/1750 RPM - TEFC-AC	⊗	⊗	⊗	⊗
		B = 0.25 Hp/1150 RPM - TEFC-AC	⊗	⊗	⊗	⊗
		C = 0.25 Hp/1750 RPM - TENV-DC w/ SCR Control	⊗	⊗	⊗	⊗
Suffix Trim Options		**- 8** = Temperature Trim	■	■	■	■
		- 9D = Viscosity Trim (double clearance)	■	■	■	■
		- 9T = Viscosity Trim (triple clearance)	■	■	■	■

* Titanium pumps have TiO_2-Coated Shafts as standard

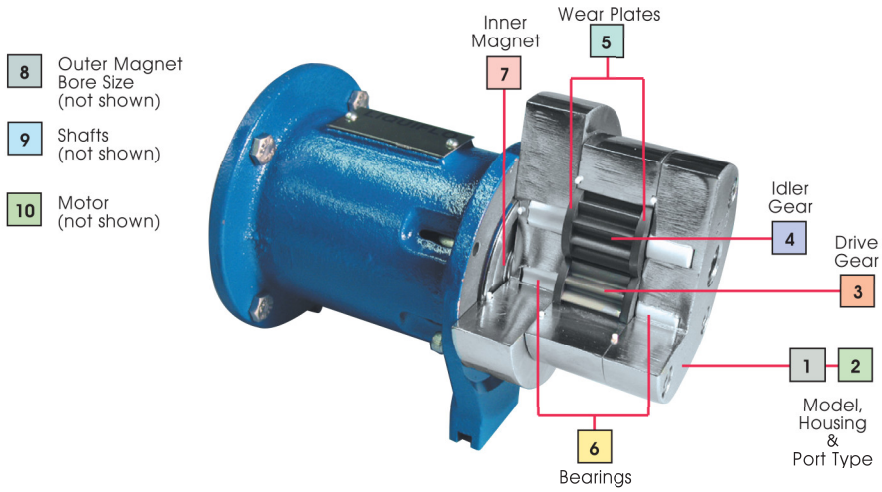

4-Series Mag-Drive Gear Pump